UniFi Network AC nanoHD

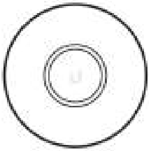
a

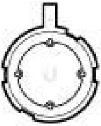
b

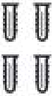
c

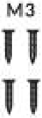

d

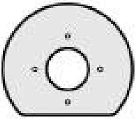
e

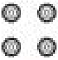
f

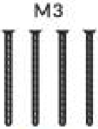

g

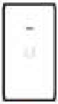
h

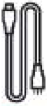
i

1

A

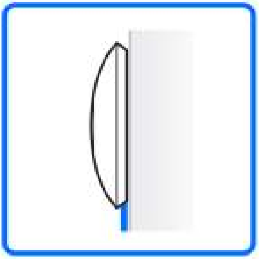

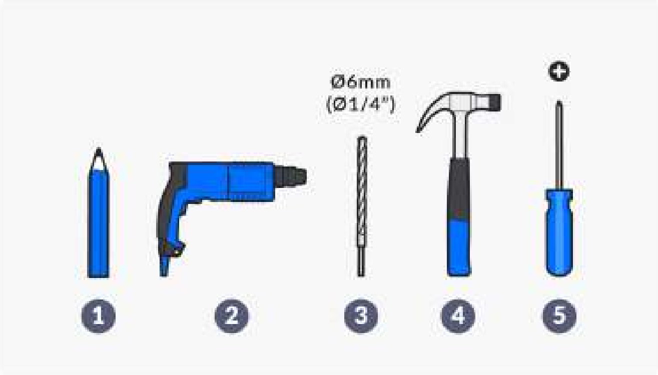
Ø6mm
(Ø1/4")
1
2
3
4
5

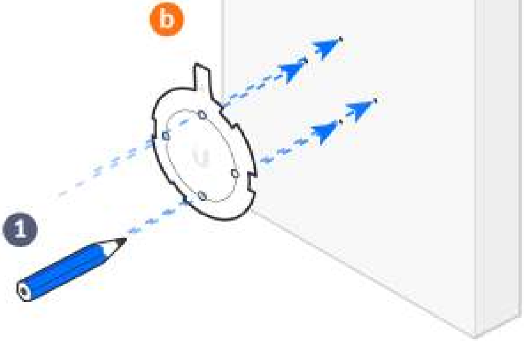

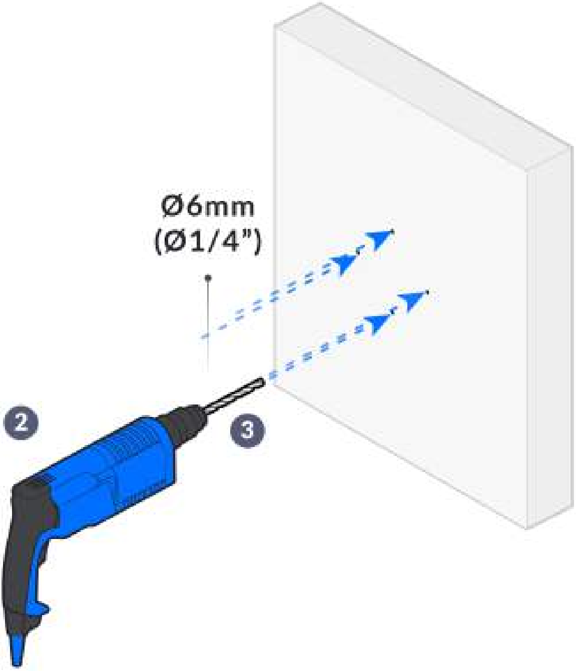

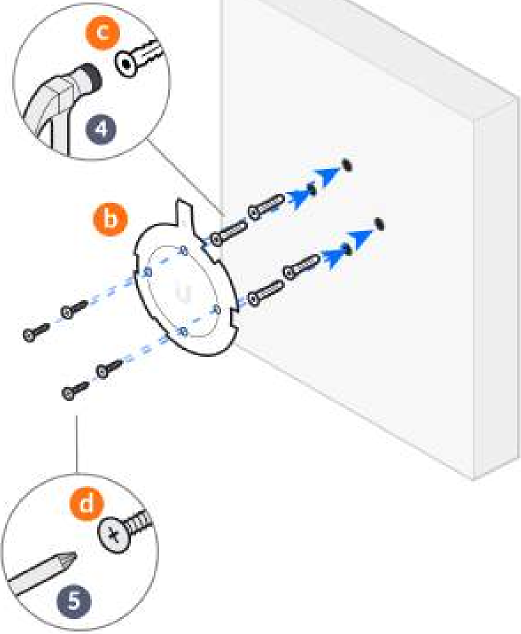

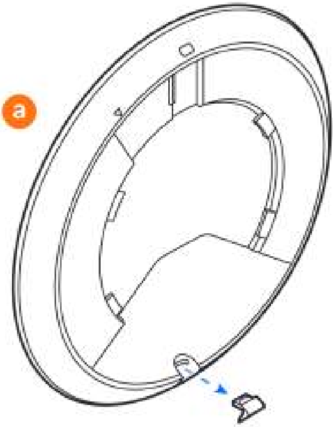

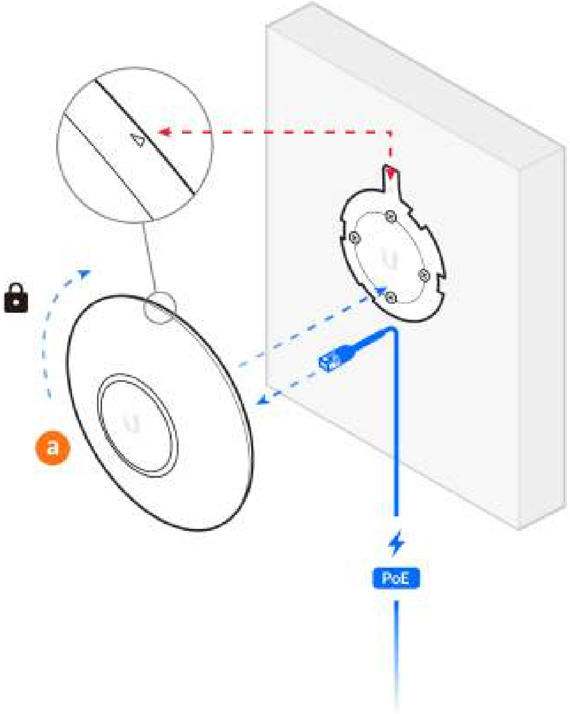

B

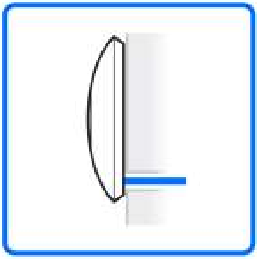

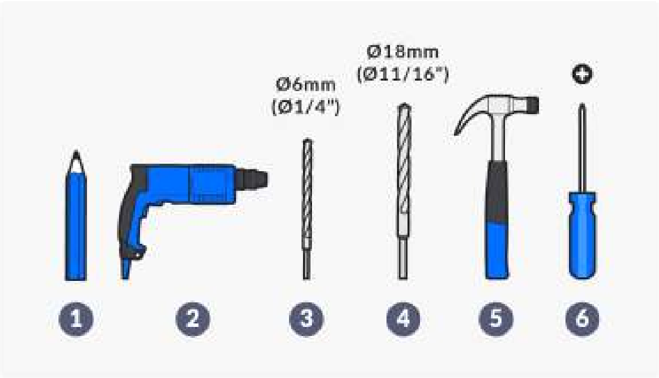
Ø6mm
(Ø1/4")
Ø18mm
(Ø11/16")
1
2
3
4
5
6

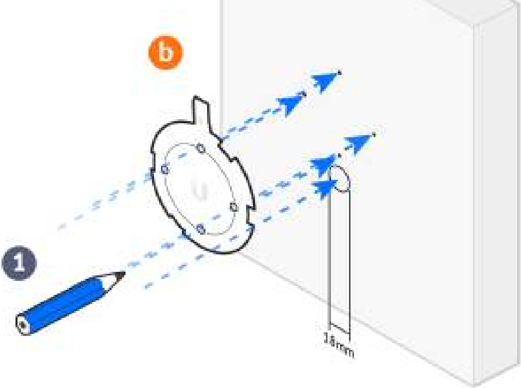

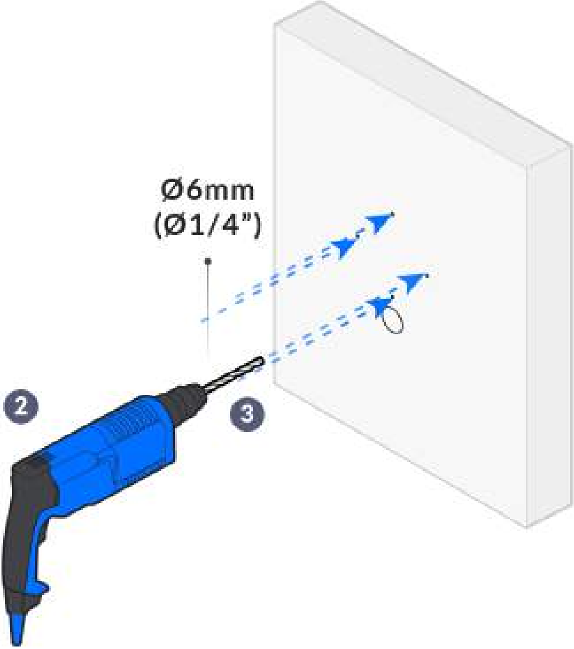

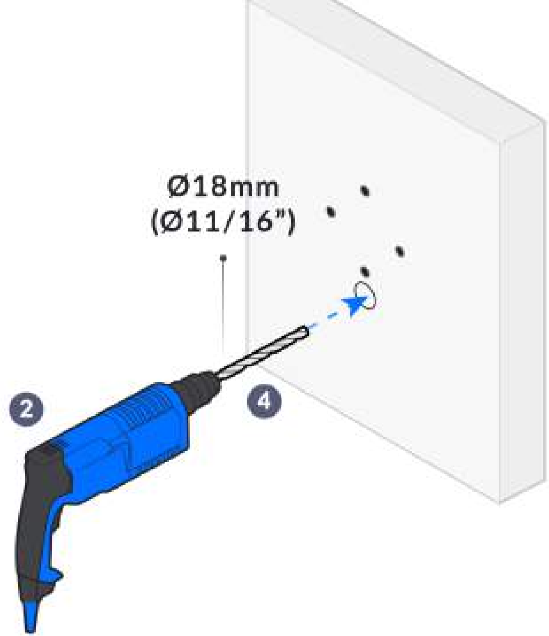
Ø18mm
(Ø11/16")
2
4

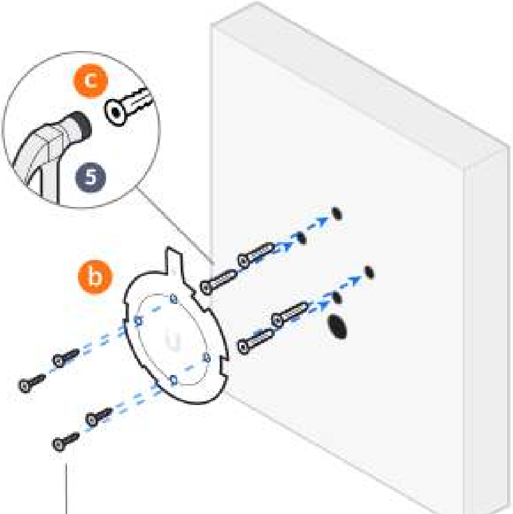

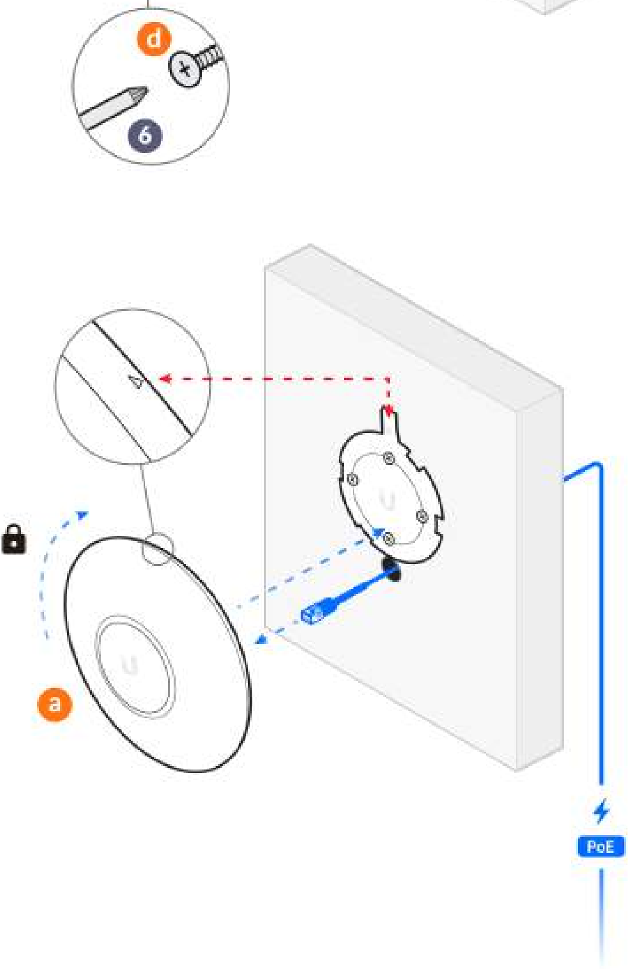

C

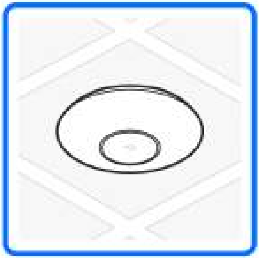

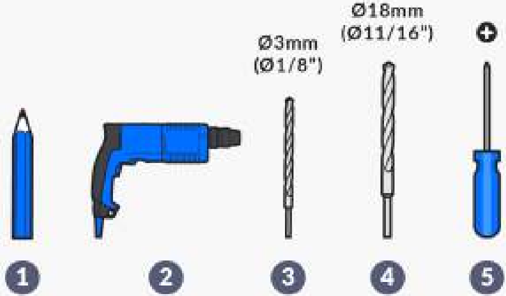
Ø3mm
(Ø1/8")
Ø18mm
(Ø11/16")
1
2
3
4
5

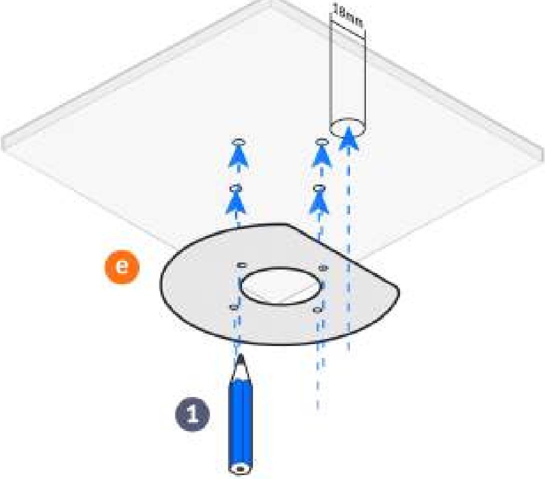

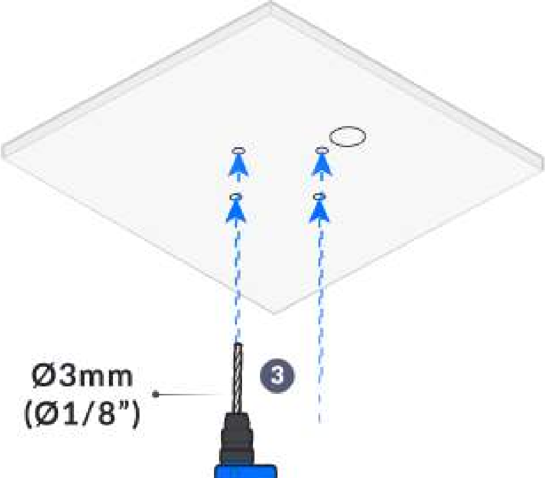

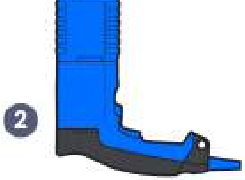

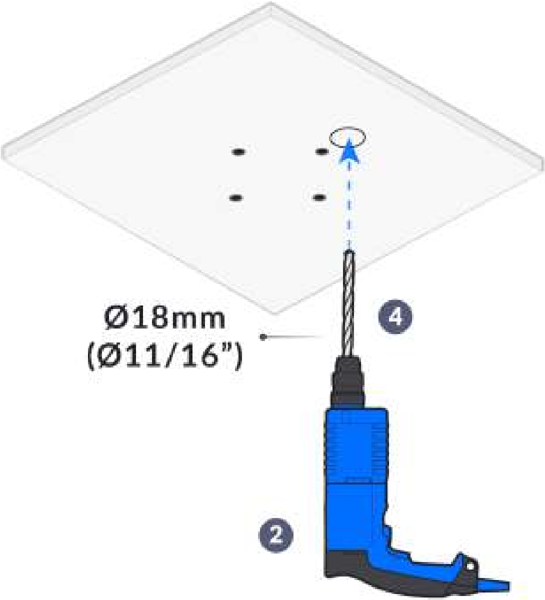
Ø18mm
(Ø11/16")
4
2

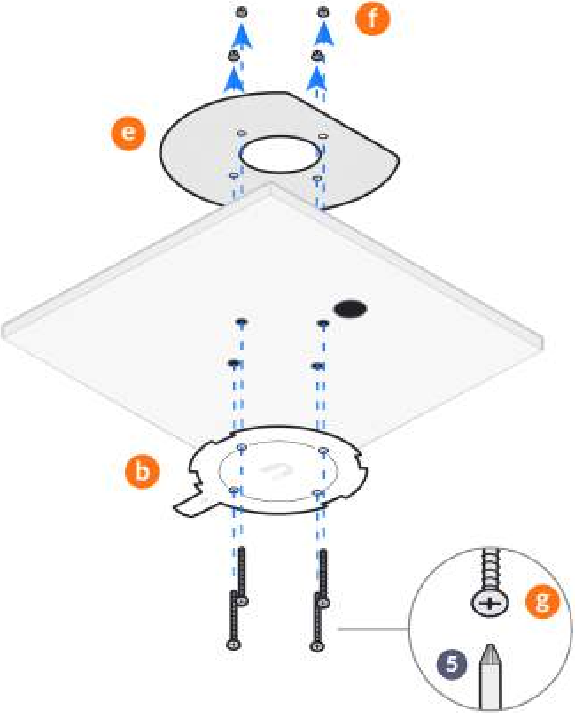

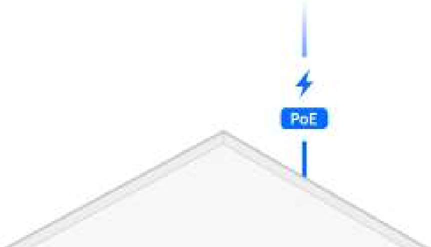

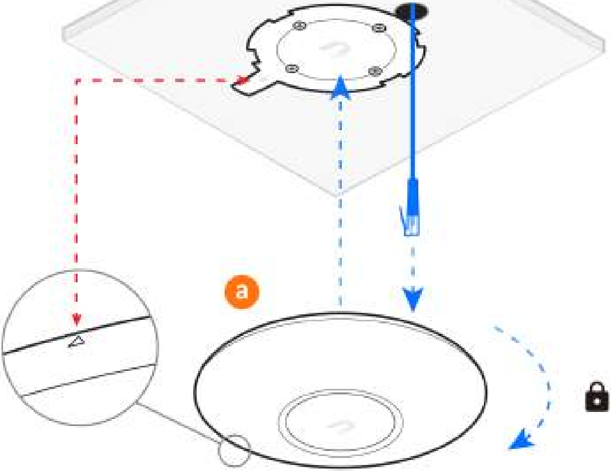

2

Ⓐ

Ⓑ

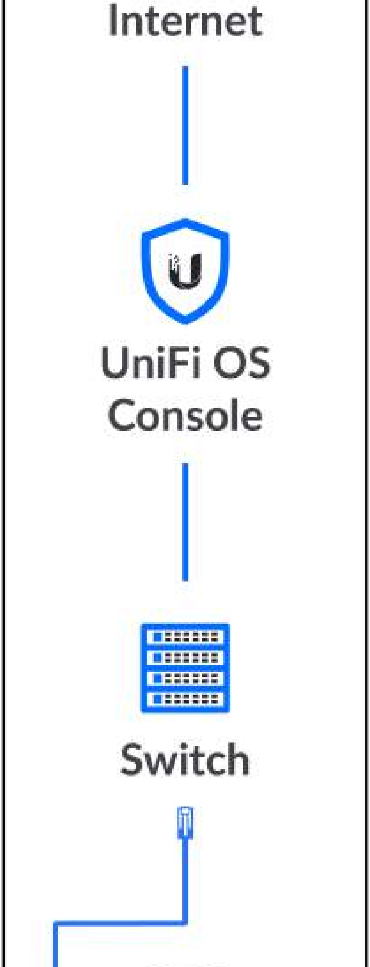
Internet
UniFi OS Console
Switch

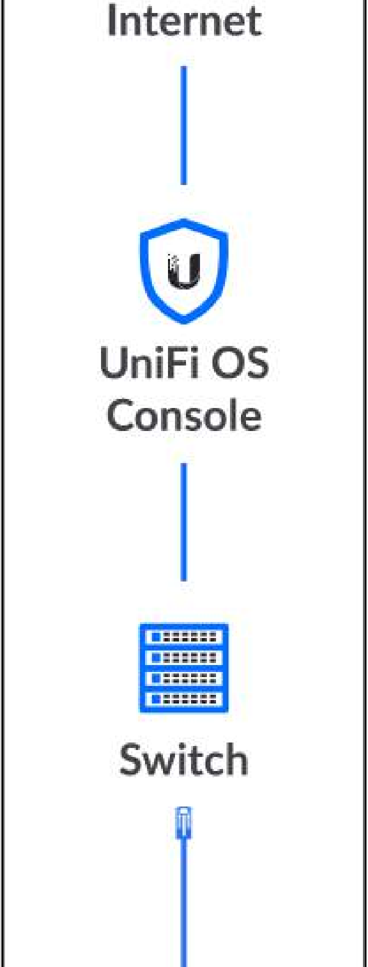
Internet
UniFi OS Console
Switch

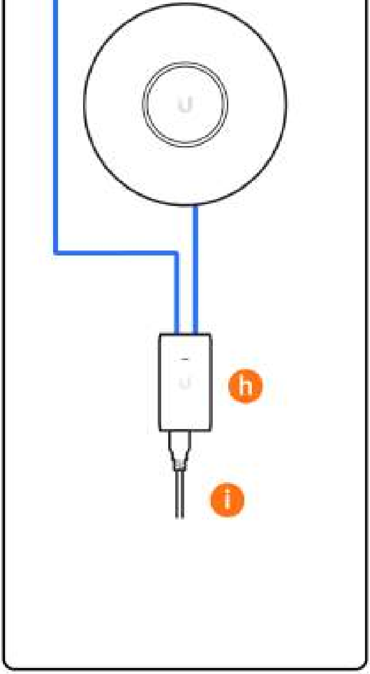

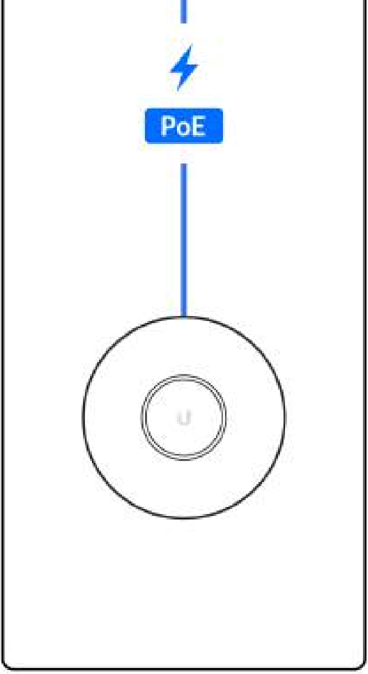

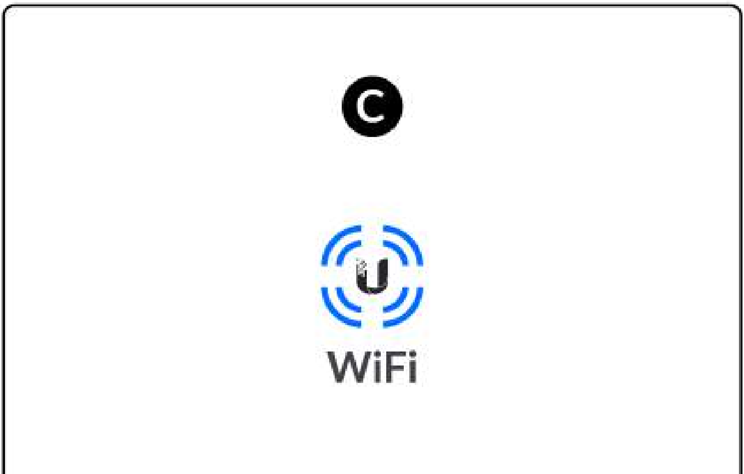

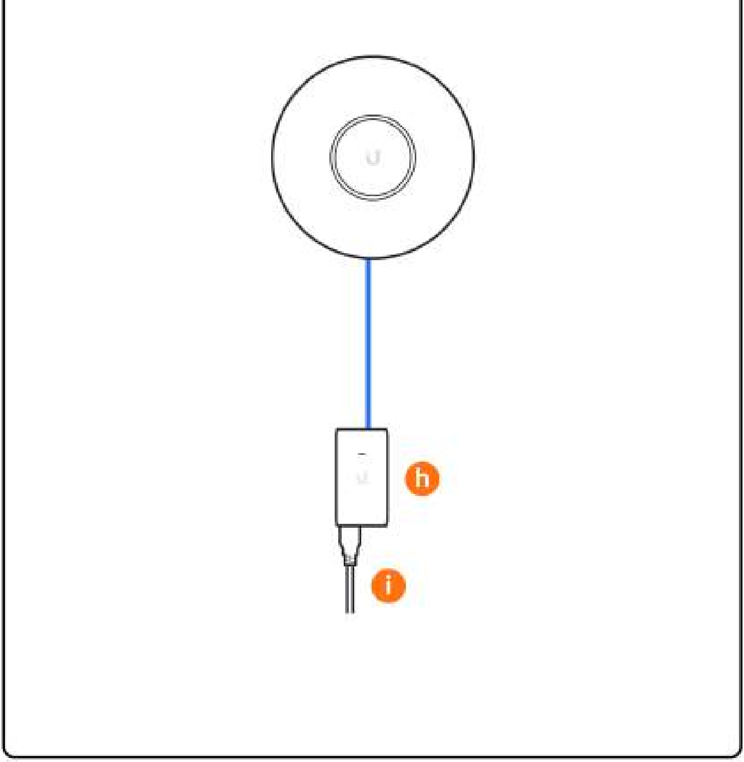

3

Download on the App Store

GET IT ON Google Play

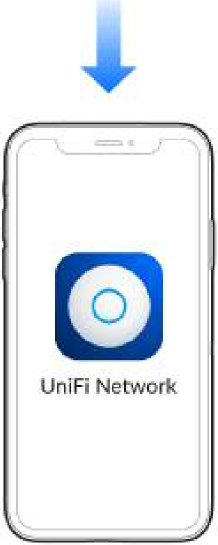

UniFi Network

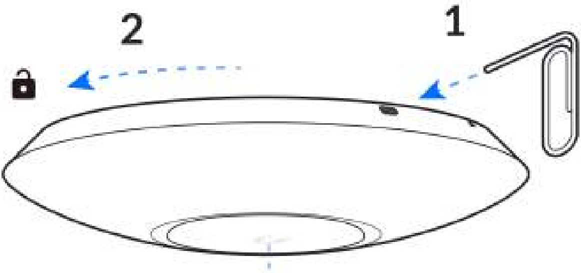

Get Answers
help.ui.com

UI Support

[illegible]